Work Order ID 59013

Friday, May 21, 2010 10:56:54 AM

Item ID: D3836-042 **Accept** **Setup Start** **Stop**

Revision ID:

Item Name: Rib Assembly (Basket Lid, RH)

Start Date: 5/21/2010 **Start Qty:** 2.00 **Cust Item ID:**

Required Date: 5/31/2010 **Req'd Qty:** 2.00 **Customer:**

Reference:

Approvals: **Process Plan:** K **Date:** 10-5-21 **Tooling:** _____ **Date:** _____ **Run Start** **Stop**

QC: _____ **Date:** _____ **SPC (Y/N):** _____ **Date:** _____

Sequence ID/ Work Center ID	Operation Description	Set Up/ Run Hours	Draw Number	Draw Rev.	Plan Code	Accept Qty	Reject Qty	Reject Number	Insp. Stamp
100	Large Fab	0.00							
Large Fab		0.00							
Large Fab									

Draw Nbr	Revision Nbr
D3836	Rev A

② SY 10/05/31

Memo

1- cut D3836-2 and D3836-3 rib as per dwg D3836

2- remove identification markings

3- deburr

SAD 10-05-27

4- weld D3836-2 to D3836-3 and drill hole (3/16") using DT9447 jig and open to finish size as per dwg D3836

5- weld D2327-3 spacer bushing as per dwg D3836

A/R ER316 S.S. Rod Batch: M113328

6- grind weld flush where indicated on dwg

Dart Aerospace Ltd

W/O:		WORK ORDER CHANGES					
DATE	STEP	PROCEDURE CHANGE	By	Date	Qty	Approval Chief Eng / Prod Mgr	Approval QC Inspector

Part No: _____ **PAR #:** _____ **Fault Category:** _____ **NCR:** Yes No **DQA:** _____ **Date:** _____

Resolution: _____ **Disposition:** _____ **QA: N/C Closed:** _____ **Date:** _____

NCR:		WORK ORDER NON-CONFORMANCE (NCR)						
DATE	STEP	Description of NC Section A	Corrective Action Section B			Verification Section C	Approval Chief Eng	Approval QC Inspector
			Initial Chief Eng	Action Description Chief Eng	Sign & Date			

NOTE: Date & initial all entries

H:\fFORMS\Quality Assurance\approved QA\NCRWO RevE

Work Order ID 59013

Friday, May 21, 2010 10:56:54 AM

Item ID: D3836-042 **Accept** **Setup Start**

Revision ID: **Stop**

Item Name: Rib Assembly (Basket Lid, RH)

Start Date: 5/21/2010 **Start Qty:** 2.00 **Cust Item ID:**

Required Date: 5/31/2010 **Req'd Qty:** 2.00 **Customer:**

Reference:

Approvals: **Process Plan:** _____ **Date:** _____ **Tooling:** _____ **Date:** _____ **Run Start**

QC: _____ **Date:** _____ **SPC (Y/N):** _____ **Date:** _____ **Stop**

Sequence ID/ Work Center ID	Operation Description	Set Up/ Run Hours	Draw Number	Draw Rev.	Plan Code	Accept Qty	Reject Qty	Reject Number	Insp. Stamp
130	QC9- Inspect visual per QSI004- Fusion Welds	0.00							
QC	Memo	0.00				(2)	PD	10.05.31	
Quality Control									
140	QC5- Inspect part completeness to step on W/O	0.00							
QC	Memo	0.00				(2)	PD	10.05.31	
Quality Control									
150	Identify as per dwg & Stock Location: Basket	0.00							
Packaging	Memo	0.00				(2)	PD	10.05.31	
Packaging									

Dart Aerospace Ltd

W/O:		WORK ORDER CHANGES					
DATE	STEP	PROCEDURE CHANGE	By	Date	Qty	Approval Chief Eng / Prod Mgr	Approval QC Inspector

Part No: _____ **PAR #:** _____ **Fault Category:** _____ **NCR:** Yes No **DQA:** _____ **Date:** _____

Resolution: _____ **Disposition:** _____ **QA: N/C Closed:** _____ **Date:** _____

NCR:		WORK ORDER NON-CONFORMANCE (NCR)						
DATE	STEP	Description of NC Section A	Corrective Action Section B			Verification Section C	Approval Chief Eng	Approval QC Inspector
			Initial Chief Eng	Action Description Chief Eng	Sign & Date			

NOTE: Date & initial all entries

H:\FORMS\Quality Assurance\approved QA\NCRWO RevE

Work Order ID 59013

Friday, May 21, 2010 10:56:54 AM

Item ID: D3836-042 **Accept** **Setup Start**

Revision ID:

Item Name: Rib Assembly (Basket Lid, RH) **Stop**

Start Date: 5/21/2010 **Start Qty:** 2.00 **Cust Item ID:**

Required Date: 5/31/2010 **Req'd Qty:** 2.00 **Customer:**

Reference:

Approvals: **Process Plan:** _____ **Date:** _____ **Tooling:** _____ **Date:** _____ **Run Start**

QC: _____ **Date:** _____ **SPC (Y/N):** _____ **Date:** _____ **Stop**

Sequence ID/ Work Center ID	Operation Description	Set Up/ Run Hours	Draw Number	Draw Rev.	Plan Code	Accept Qty	Reject Qty	Reject Number	Insp. Stamp
160	QC21- Final Inspection - Work Order Release	0.00							
QC Quality Control	**Memo**	0.00					10/06/01		

CL101611

Dart Aerospace Ltd

W/O:		WORK ORDER CHANGES					
DATE	STEP	PROCEDURE CHANGE	By	Date	Qty	Approval Chief Eng / Prod Mgr	Approval QC Inspector

Part No: _____ PAR #: _____ Fault Category: _____ NCR: Yes No DQA: _____ Date: _____

Resolution: _____ Disposition: _____ QA: N/C Closed: _____ Date: _____

NCR:		WORK ORDER NON-CONFORMANCE (NCR)						
DATE	STEP	Description of NC Section A	Corrective Action Section B			Verification Section C	Approval Chief Eng	Approval QC Inspector
			Initial Chief Eng	Action Description Chief Eng	Sign & Date			

NOTE: Date & initial all entries

H:\fFORMS\Quality Assurance\approved QA\NCRWO RevE

Picklist Print

Friday, May 21, 2010 10:56:59 AM

Work Order ID: 59013

Parent Item: D3836-042

Parent Item Name: Rib Assembly (Basket Lid, RH)

Comments: IPP Rev:A 08-12-01 new issue DD verified by:eC

Start Date: 5/21/2010 **Required Date:** 5/31/2010

Start Qty: 2.00 **Required Qty:** 2.00

Component Item ID/ Item Name	Replacement Item ID	Mfg/ Purch	Bin Item	Primary Location	Last Location	Route Seq ID	Unit of Measure	Qty on Hand	Qty per Kit	Total Qty	Qty Issued	Date Issued	Status
D2327-3		Manufactured	No			100	Each	1.0000	1	2			
Spacer Bushing										B58406 @ SG 10/05/31			
				Location			**Loc Qty**		**Loc Code**				
				.WA			1						
					57790		1						
M304TS0.750W.065		Purchased	No			100	f	1,200.557	1.7808	3.749053			
304 SQ Tube .75x.75x.065W										SAD 10-05-28			
				Location			**Loc Qty**		**Loc Code**				
				MAT			200.5571						
					112398		0						
					114482		200.5571			3.7490			
				WA			1000						
					114520		1000						

Dart Aerospace Ltd

W/O:		WORK ORDER CHANGES					
DATE	STEP	PROCEDURE CHANGE	By	Date	Qty	Approval Chief Eng / Prod Mgr	Approval QC Inspector

Part No: _____ **PAR #:** _____ **Fault Category:** _____ **NCR:** Yes No **DQA:** _____ **Date:** _____

Resolution: _____ **Disposition:** _____ **QA: N/C Closed:** _____ **Date:** _____

NCR:		WORK ORDER NON-CONFORMANCE (NCR)						
DATE	STEP	Description of NC Section A	Corrective Action Section B			Verification Section C	Approval Chief Eng	Approval QC Inspector
			Initial Chief Eng	Action Description Chief Eng	Sign & Date			

NOTE: Date & initial all entries

ITEM	QTY -041	QTY -042	P/N	DESCRIPTION
1	X		D3836-041	RIB ASSY (BASKET LID, LH)
2		X	D3836-042	RIB ASSY (BASKET LID, RH)
3	1	1	D2327-3	SPACER BUSHING
4	1		D3836-1	RIB
5		1	D3836-2	RIB
6	1	1	D3836-3	RIB

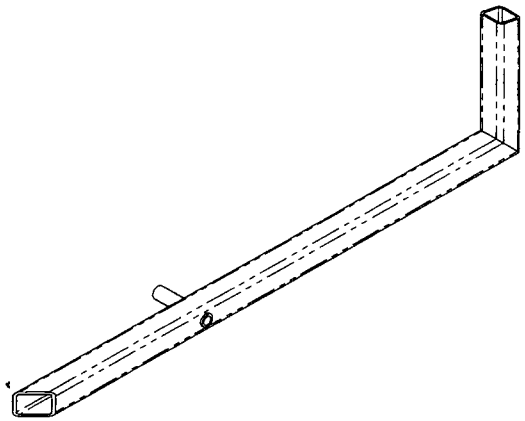

D3836-042 RIB ASSY (BASKET LID, RH)

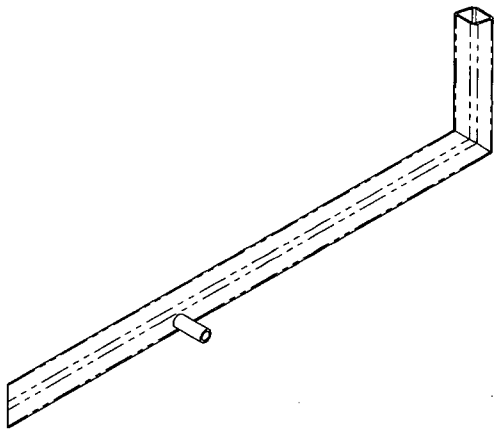

D3836-041 RIB ASSY (BASKET LID, LH)

SHOP COPY
RETURN TO
ENGINEERING
UNCONTROLLED COPY
SUBJECT TO AMENDMENT
WITHOUT NOTICE
WORK ORDER
NO. 59013
pd 0521

RELEASED
08/11/24

NOTES:
1) MATERIAL: N/A
2) FINISH: NONE
3) TOLERANCES: PER DART QSI 018 UNLESS OTHERWISE NOTED
4) UNITS: INCHES UNLESS OTHERWISE NOTED
5) BREAK SHARP EDGES: 0.005 TO 0.010 MAX
6) IDENTIFICATION: N/A
7) WEIGHT: 0.99 lbs EACH
8) WELD PER DART QSI 004

REV.	DESCRIPTION	BY	DATE
A	NEW ISSUE	MB	08.09.24

DESIGN	
DRAWN	
CHECKED	
MFG. APPR.	
APPROVED	
DE APPR.	
DATE	08.09.24

DART AEROSPACE LTD
HAWKESBURY, ONTARIO, CANADA

DRAWING NO. D3836 REV. A
SHEET 1 OF 3
TITLE RIB ASSY (BASKET LID)
SCALE NTS

Dart Aerospace Ltd

W/O:		WORK ORDER CHANGES					
DATE	STEP	PROCEDURE CHANGE	By	Date	Qty	Approval Chief Eng / Prod Mgr	Approval QC Inspector

Part No: _____ **PAR #:** _____ **Fault Category:** _____ **NCR:** Yes No **DQA:** _____ **Date:** _____

Resolution: _____ **Disposition:** _____ **QA: N/C Closed:** _____ **Date:** _____

NCR:		WORK ORDER NON-CONFORMANCE (NCR)						
DATE	STEP	Description of NC Section A	Corrective Action Section B			Verification Section C	Approval Chief Eng	Approval QC Inspector
			Initial Chief Eng	Action Description Chief Eng	Sign & Date			

NOTE: Date & initial all entries

H:\fFORMS\Quality Assurance\approved QA\NCRWO RevE

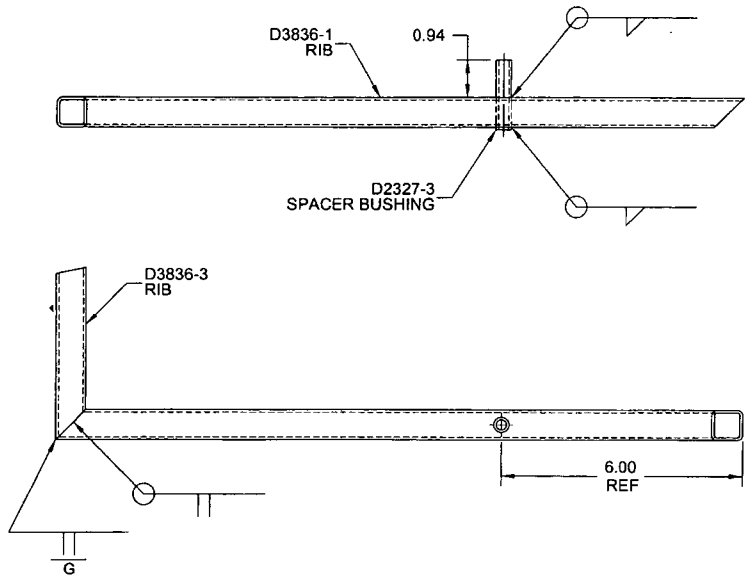

D3836-041 RIB ASSY (BASKET LID, LH)

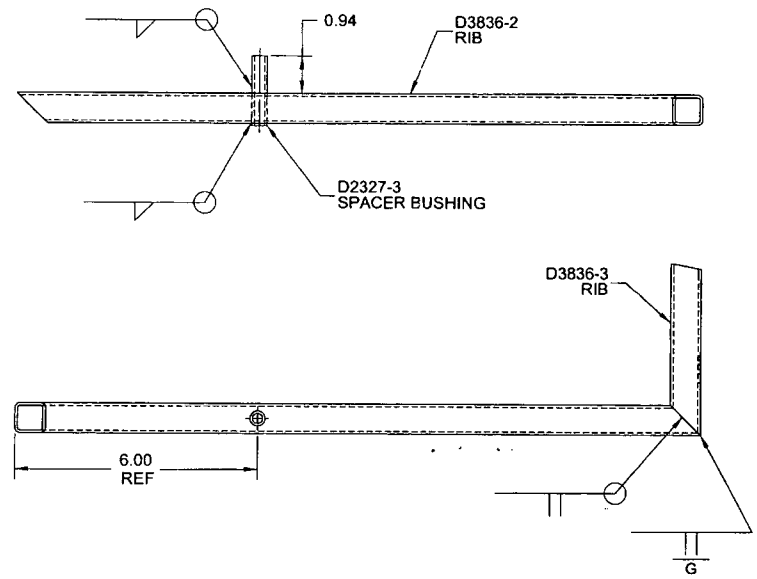

D3836-042 RIB ASSY (BASKET LID, RH)

RELEASED 08/11/18

w/o 59013

DESIGN		**DART AEROSPACE LTD** HAWKESBURY, ONTARIO, CANADA
DRAWN		
CHECKED		DRAWING NO. D3836 — REV. A — SHEET 2 OF 3
MFG. APPR.		
APPROVED		TITLE RIB ASSY (BASKET LID) — SCALE NTS
DE APPR.		
DATE 08.09.24		

Dart Aerospace Ltd

W/O:		WORK ORDER CHANGES					
DATE	STEP	PROCEDURE CHANGE	By	Date	Qty	Approval Chief Eng / Prod Mgr	Approval QC Inspector

Part No: _____ PAR #: _____ Fault Category: _____ NCR: Yes No DQA: _____ Date: _____

Resolution: _____ Disposition: _____ QA: N/C Closed: _____ Date: _____

NCR:		WORK ORDER NON-CONFORMANCE (NCR)						
DATE	STEP	Description of NC Section A	Corrective Action Section B			Verification Section C	Approval Chief Eng	Approval QC Inspector
			Initial Chief Eng	Action Description Chief Eng	Sign & Date			

NOTE: Date & initial all entries

H:\fFORMS\Quality Assurance\approved QA\NCRWO RevE

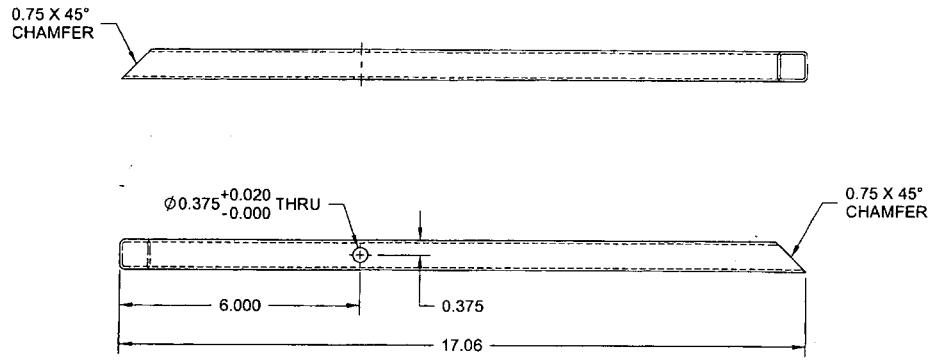

D3836-1 RIB

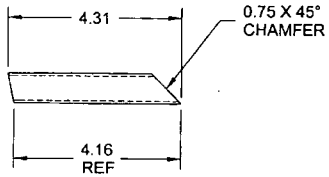

D3836-3 RIB

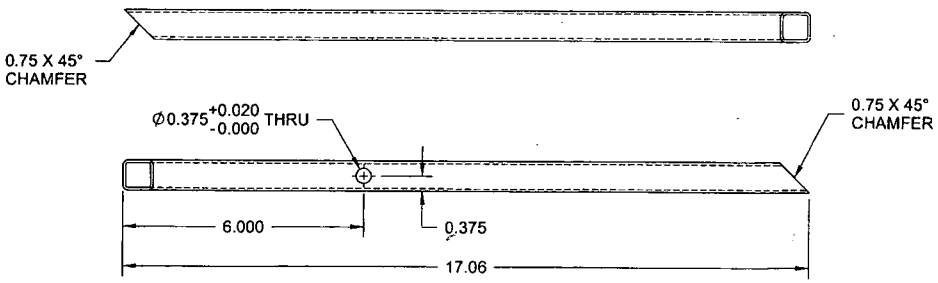

D3836-2 RIB

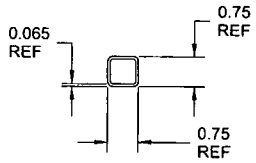

TYPICAL SECTION VIEW

RELEASED 08/11/8 NP

w/o 59019

NOTES:
1) MATERIAL: AISI 304/316 STAINLESS STEEL SQUARE TUBE, 0.75 X 0.75 X 0.065 WALL
REF. DART SPEC. M304TS0.750W0.065
2) FINISH: NONE
3) TOLERANCES: PER DART QSI 018 UNLESS OTHERWISE NOTED
4) UNITS: INCHES UNLESS OTHERWISE NOTED
5) BREAK SHARP EDGES: 0.005 TO 0.010 MAX
6) IDENTIFICATION: N/A
7) WEIGHT: D3836-/-2 = 0.78 lbs EACH; D3836-3 = 0.19 lbs

DESIGN		**DART AEROSPACE LTD** HAWKESBURY, ONTARIO, CANADA
DRAWN		
CHECKED		DRAWING NO. D3836 — REV. A — SHEET 3 OF 3
MFG. APPR.		
APPROVED		TITLE: RIB ASSY (BASKET LID) — SCALE: NTS
DE APPR.		
DATE	08.09.24	

Dart Aerospace Ltd

W/O:		WORK ORDER CHANGES					
DATE	STEP	PROCEDURE CHANGE	By	Date	Qty	Approval Chief Eng / Prod Mgr	Approval QC Inspector

Part No: _____ **PAR #:** _____ **Fault Category:** _____ **NCR:** Yes No **DQA:** _____ **Date:** _____

Resolution: _____ **Disposition:** _____ **QA: N/C Closed:** _____ **Date:** _____

NCR:		WORK ORDER NON-CONFORMANCE (NCR)						
DATE	STEP	Description of NC Section A	Corrective Action Section B			Verification Section C	Approval Chief Eng	Approval QC Inspector
			Initial Chief Eng	Action Description Chief Eng	Sign & Date			

NOTE: Date & initial all entries

H:\fFORMS\Quality Assurance\approved QA\NCRWO RevE